Association of DNA methylation of HPA-axis related genes *FKBP5* and *NR3C1* with obsessive-compulsive disorder

Jun Ho Seo

Department of Medicine

The Graduate School, Yonsei University

Association of DNA methylation of HPA-axis related genes *FKBP5* and *NR3C1* with obsessive-compulsive disorder

Directed by Professor Se Joo Kim

The Doctoral Dissertation
submitted to the Department of Medicine,
the Graduate School of Yonsei University
in partial fulfillment of the requirements for the degree
of Doctor of Philosophy

Jun Ho Seo

June 2022

This certifies that the Doctoral Dissertation of Jun Ho Seo is approved.

Thesis Supervisor : Se Joo Kim

Thesis Committee Member#1 : Jee In Kang

Thesis Committee Member#2 : Sangwoo Kim

Thesis Committee Member#3: Sang-hyuk Lee

Thesis Committee Member#4: Seung-tae Lee

The Graduate School
Yonsei University

June 2022

ACKNOWLEDGEMENTS

Before everything else, I appreciate my thanks to God the Almighty who let me become a psychiatrist and a researcher at the same time.

I would like to express the deepest gratitude to my supervisor Professor Se Joo Kim for giving me great opportunities on this journey of scientific research. He taught me to be precise and clear when working on research papers. He also guided me to take things as they are. It was a great honor to study under his invaluable guidance. I was able to accomplish my doctorate thanks to my teacher's warm support and trust.

I am also willing to express the deepest appreciation to my committee chair, Professor Jee In Kang. She always has motivated me to be better psychiatrist and research scientist. Insightful advice from her substance of genius and whole-hearted support gave me admiration and strength to go on the path of a researcher. I feel so lucky to be a pupil of both Professors.

I would like to thank my thesis committee members Professor Sangwoo Kim, Sang-hyuk Lee, and Seung-tae Lee for their time and valuable suggestions that enriched the discussion. Their valuable comments covered every aspects from clinical to methodological concerns and helped greatly improve the research.

Furthermore, I deeply thank all the professors and colleagues in the Department of Psychiatry at Yonsei University College of Medicine, for their warm support and care. I am profoundly grateful to my colleagues at Professor Se Joo Kim's Laboratory, Shin Tae Kim and Su-moa Jeon, for their immense help.

This journey would not have been possible without the tremendous support from my family. I am grateful to my parents, who have always believed in me and inspired me to follow my dreams throughout my life. I always love you with deep trust. I would like to thank my beloved wife Hee-yoon, who understands me deeply and has encouraged me despite all the adversities from her pregnancy and childbirth during the course. To my lovely daughter Yeon-hee, one single smile of you solves every worries of my mind. Thank you for just being you.

Finally, I will continue to dedicate myself to psychiatric research for improving the lives of people with mental illness.

<TABLE OF CONTENTS>

LIST OF FIGURES

LIST OF TABLES

ABSTRACT

Association of DNA methylation of HPA-axis related genes *FKBP5* and *NR3C1* with obsessive-compulsive disorder

Jun Ho Seo

Department of Medicine
The Graduate School, Yonsei University

(Directed by Professor Se Joo Kim)

Introduction: Although hypothalamic-pituitary-adrenal (HPA) axis dysregulation in obsessive-compulsive disorder (OCD) has been reported, epigenetic changes in HPA axis-related genes have not been well studied in OCD. The present study investigated whether the epigenetic regulation of HPA axis-related genes, such as FK506-binding protein 51 (*FKBP5*) and glucocorticoid receptor gene (*NR3C1*), is associated with OCD status. In addition, relationships among the DNA methylation levels of *FKBP5* and *NR3C1*, OCD status and early-life trauma were explored.

Methods: A total of 267 patients with OCD and 201 controls aged between 18 and 40 years were recruited. Demographic and clinical assessment, *FKBP5* rs1360780 genotyping, and pyrosequencing of *FKBP5* and *NR3C1* were carried out. MANCOVA and structural equation modeling were conducted for both sexes and for a drug-naïve subset.

Results: Compared to healthy controls, DNA methylation at the *FKBP5* intron 7 CpG2 site was significantly reduced in men with OCD. In addition, reduced DNA methylation at *NR3C1* exon 1F CpG3 site was prominent in women with OCD. The mediation effect of the DNA methylation levels was not significant between early-life trauma and OCD status.

Discussion: These findings suggest that epigenetic factors of genes involved in HPA axis activity, such as the DNA methylation levels of *FKBP5* and *NR3C1*, may play a role in the pathogenesis of OCD. Further studies are needed to determine how altered DNA methylation and mRNA expression of both genes and HPA-axis function are involved in OCD.

Key words: obsessive-compulsive disorder, FKBP5 gene, NR3C1 gene, candidate epigenetic study, methylation, HPA axis, stress regulation

Association of DNA methylation of HPA-axis related genes *FKBP5* and *NR3C1* with obsessive-compulsive disorder

Jun Ho Seo

Department of Medicine
The Graduate School, Yonsei University

(Directed by Professor Se Joo Kim)

I. INTRODUCTION

Obsessive compulsive disorder (OCD) is a common and debilitating psychiatric disorder that features unwanted, intrusive, and uncontrollable thoughts (obsessions) and repetitive behaviors or mental acts (compulsions) [1-3]. It shows a chronic or episodic course with time-consuming, distressing symptoms that can impair social, occupational, and academic functioning. OCD is substantially heritable in the range of 23%~43% [4]. Although a growing body of evidence suggests that both genetic and environmental factors contribute to the risk for OCD [5-9], the molecular mechanism of OCD remains unclear.

Epigenetic mechanisms, inherited and acquired modifications of DNA and histones without a change in DNA sequence, regulate genetic functions and provide new insight into complex diseases as a molecular interface between the genome and environment. DNA methylation, a key epigenetic mechanism, may play a crucial role in the complex pathophysiology of OCD through the

interaction of genetic components and environmental factors such as adverse life events [10,11].

A gene regulating the hypothalamic-pituitary-adrenal (HPA) axis, the central biological pathway responding to stress, is an interesting candidate for epigenetic study in OCD. Substantial evidence suggests that stress plays a role in OCD pathophysiology. Trauma exposures before the onset of OCD were often reported to range from 30% to 82%, suggesting a role of stress in OCD development [12-14]. In particular, early life trauma, which can alter the HPA axis [15], has been shown to increase the risk for OCD [16-19]. In addition, dysregulation of the HPA axis has been reported in patients with OCD, such as a hyperactive HPA axis with increased basal cortisol or plasma adrenocorticotropic hormone (ACTH) [20-24]. However, little is known about epigenetic changes in HPA axis-related genes in OCD [25,26].

The FK506 binding protein gene (*FKBP5*) and nuclear receptor subfamily 3 Group C member 1 gene (*NR3C1*) are widely studied HPA axis-related genes [27-29]. FKBP5, a heat shock protein 90-associated cochaperone integral to the glucocorticoid receptor (GR) complex, modulates GR sensitivity [30,31] and is involved in stress response, synaptic plasticity and neuronal function [32]. Binding of FKBP5 to the GR complex reduces GR affinity to cortisol and delays its nuclear translocation [31]. GR activation via intronic hormone response elements induces FKBP5 expression and this provides an ultra-short intra-cellular negative feedback loop for GR-sensitivity [33-35]. High expression of FKBP5 can lead to an increased GR resistance resulting in dysregulated stress response by decreasing efficiency of the negative feedback loop [30,31]. FKBP5 dysregulation has been reported in various clinical phenotypes, such as pathological anxiety [36-40], depression [41-43], suicidality [44], and posttraumatic stress disorder (PTSD) [45-48]. In addition, *NR3C1* encoding GR is a key element of HPA axis regulation [49]. *NR3C1* epigenetic changes have also been reported to be associated with stress-related disorders, including depression [50,51] and PTSD

[52]. Since the transcription levels of both *FKBP5* and *NR3C1* have been reported to induce feedback mechanisms restraining the actions of glucocorticoids [53,54] and to be associated with nonsuppression in the dexamethasone suppression test (DST) [55], DNA methylation levels may be interesting targets in candidate epigenetic studies of stress-related disorders. To date, however, there is little evidence of an association between OCD and the methylation levels of *FKBP5* and *NR3C1*.

The present study aimed to investigate whether alterations in *FKBP5* and *NR3C1* are associated with OCD status. In addition, the relationship among the DNA methylation levels of *FKBP5* and *NR3C1*, OCD status, and early life trauma was explored. Our main hypothesis is that the DNA methylation levels of *FKBP5* and *NR3C1* would be different between patients with OCD and controls. The secondary hypothesis is that epigenetic alterations of *FKBP5* or *NR3C1* mediate the relationship between early life trauma and OCD status.

II. MATERIALS AND METHODS

1. Participants and procedures

A total of 267 patients with OCD and 201 controls aged between 18 and 40 years were recruited. Unrelated patients with OCD were recruited from the outpatient clinic of Severance Hospital in Seoul, Korea. All participants were assessed using the Structured Clinical Interview for DSM-IV Axis I disorder (SCID-I) by psychiatrists. A total of 118 of the 267 patients with OCD were drug-naïve or -free of psychiatric medications for more than 3 months prior to enrollment. The exclusion criteria for OCD were having severe medical conditions or neurological disorders or a diagnosis of schizophrenia-spectrum disorders, substance use disorders, and intellectual disabilities. Patients with OCD with other comorbid DSM-IV Axis I disorders were not excluded if obsessive-compulsive symptoms were the primary reason for treatment. For

healthy controls, exclusion criteria were having any major psychiatric disorder or psychiatric medication or any uncontrolled medical disorder. All subjects gave their written informed consent after giving a full explanation of the study, including the collection of blood samples for DNA extraction. The study was approved by the Institutional Review Board of Severance Hospital, South Korea. The IRB approval number was 4-2015-0655.

2. Early life trauma assessment

The Early Trauma Inventory Self Report-Short Form (ETISR-SF) was utilized to measure the early life trauma history of subjects [56]. The ETISR-SF assesses early life traumas in 4 categories: general trauma, physical abuse, sexual abuse, and emotional abuse. Participants can answer yes or no to each of the 27 items. The Korean version of this scale was evaluated for its validity and reliability and demonstrated good indicators [57].

3. Measurement of obsessive compulsive and depressive symptoms

To evaluate obsessive compulsive symptom severity, the Yale-Brown Obsessive Compulsive Scale (Y-BOCS), a 5-point Likert scale consisting of 10 items, was used [58]. The Montgomery-Åsberg Depression Rating Scale (MADRS), a clinician-rated scale of 10 items that assess depressive symptomatology within the last 7 days [59], was carried out to check current symptoms of depression.

4. SNP genotyping

The *FKBP5* rs1360780 single nucleotide polymorphism was analyzed since genotypic influence of rs1360780 on *FKBP5* demethylation has been reported [45,60]. DNA was extracted from peripheral blood leucocytes (PBMCs). The genotyping procedures were carried out using a single base primer extension assay with the ABI PRISM SNaPShot multiplex kit (ABI, Foster City,

CA, USA) according to the manufacturer's recommendations. Analysis was performed by DNA Link, Inc. (Seoul, South Korea). Detailed information about the primers used for genotyping in this study is provided in the supplementary material (**Table S1**).

5. Pyrosequencing for DNA methylation analysis

The DNA methylation status of two CpG sites on *FKBP5* intron 7 and three CpG sites on *NR3C1* exon 1F (**Figure S1 & S2**) were analyzed with the bisulfite pyrosequencing method. *FKBP5* intron 7, which contains a GR binding enhancer region, was selected based on a previous result that decreased DNA methylation levels of the region can lead to increased *FKBP5* mRNA expression [61]. *NR3C1* exon 1F, which contains a binding site for the nerve growth factor-inducible protein A (NGFI-A) was selected because it has been implied that the region has some connections with traumas and related psychiatric disorders in previous studies [51,62,63]. Among CpGs on *NR3C1* exon 1F, three CpGs acting similarly in a region-specific manner were selected [64,65]. After standard bisulfite treatment, polymerase chain reaction (PCR) for pyrosequencing analysis was performed. The amplification was performed according to the general guidelines of the pyrosequencing method using primers and standard cycling schedules. The percentages of individual methylation at selected CpG sites were estimated. Non-CpG cytosine analysis was also performed during pyrosequencing for quality control. To assess successful bisulfite treatment, CpG assays contained internal controls at the beginning of the sequence. To correct potential batch effects, plate controls were used. Matched case-control samples were analyzed in the same batch, and all batches were analyzed at the same time. The pyrosequencing procedures were conducted by the service of Macrogen, Inc. (Seoul, South Korea). Detailed information about the primers used is provided in the supplementary material (**Table S2**).

6. Statistical analyses

Independent sample *t tests* and chi-square tests were performed to compare demographic information between patients with OCD and controls using R for Windows v 3.6.3. Statistical significance was considered when $p < 0.05$. To verify the main hypothesis, multivariate analysis of covariance (MANCOVA) was conducted in each sex to compare the DNA methylation levels of two CpG sites on *FKBP5* and three CpG sites on *NR3C1* between patients with OCD and normal controls. For MANCOVA, variables were checked for normality by histograms and the Shapiro–Wilk test. For variables violating normality assumption in MANCOVA, normal score with the Blom method was applied [66]. Age, the ETISR-SF total score, and the MADRS score were considered covariates in the analysis to adjust for the potential influence of early life trauma or depression on methylation levels. As the *FKBP5* rs1360780 genotype is known to regulate the expression levels of both GR and FKBP5, it was included as a categorical covariate in MANCOVA [67]. For post hoc ANCOVA, the Bonferroni method was applied to adjust multiple comparisons of CpG sites ($\alpha = 0.025$ for the two *FKBP5* CpGs and 0.017 for the three *NR3C1* CpG sites).

Next, structural equation modeling (SEM) was conducted with the weighted least score or maximum likelihood method to determine the mediation effects of DNA methylation levels of *FKBP5* or *NR3C1* between early-life trauma and OCD status by using Mplus Version 7 [68]. SEM, a powerful method to test multivariate causal relationships, is very useful to test the direct and indirect effects on presumed causal relationships [69]. As DNA methylation levels were moderately intercorrelated in 3 CpGs of *NR3C1*, the model included the latent variables that represent *NR3C1* methylation extracted from the factor analysis. As DNA methylation levels at the two *FKBP5* CpG sites were not bound by one factor, each was included in the model as an observed variable. In this model, OCD status and DNA methylation levels of both genes were

regarded as endogenous variables, and age, ETISR-SF total score, and rs1360780 genotype were regarded as exogeneous variables. To test the moderation effect of genotype on methylation levels, the interaction between ETISR-SF and the genotype (GxE) variable was added to the model. The statistical fit of the model was assessed using the chi-square/df, comparative fit index (CFI), Tucker Lewis index (TLI), root mean square error of approximation (RMSEA), and weighted root mean square residual (WRMR). Chi-square/df above 0.05, CFI and TLI values above 0.9, RMSEA values less than 0.05, and WRMR above 0.05 were considered indicators of good fit.

All analyses were performed separately for men and women because the HPA-axis regulating mechanism has been suggested to be different in response to early life trauma between men and women [70] and because OCD is known to manifest sexually dimorphic characteristics in many aspects (e.g., age of onset, symptom dimensions, prognosis, etc.) [71-73]. After the main analyses, subgroup analyses for drug-naïve or -free patients with OCD compared with controls were performed in the same way.

III. RESULTS

1. Sociodemographic and basic characteristics

The sociodemographic and clinical characteristics and genotyping results of patients with OCD and controls are presented in **Table 1**. For early-life trauma, patients with OCD had significantly higher scores than controls based on ETISR-SF. In addition, for depressive symptoms, patients with OCD showed higher MADRS scores than controls. Genotype distributions were not different between patients with OCD and controls. There was no significant deviation from the Hardy-Weinberg equilibrium in the control SNP data ($\chi^2 = 0.044$, $p = 0.845$).

Table 1 Demographic and clinical characteristics of the study participants

	Men			Women		
	OCD[a] (n = 171)	HC[a] (n = 117)	P[b]	OCD[a] (n =96)	HC[a] (n =84)	P[b]
Age	25.03 ± 5.54	25.07 ± 4.36	0.943	26.99 ± 6.78	26.38 ± 5.53	0.498
Education, year	13.41 ± 2.09	13.54 ± 2.06	0.607	14.25 ± 2.24	14.74 ± 2.05	0.127
ETI, total score	7.30 ± 4.84	4.55 ± 3.67	<0.001	5.82 ± 4.22	4.06 ± 3.50	0.002
Genotype (rs1360780)			0.308			0.447
CC	96 (58.18%)	73 (62.39%)		51 (56.04%)	44 (52.38%)	
CT	56 (33.94%)	40 (34.19%)		36 (39.56%)	32 (38.10%)	
TT	13 (7.88%)	4 (3.42%)		4 (4.40%)	8 (9.52%)	
Depression	96 (56.14%)			53 (55.21%)		
MADRS	20.41 ± 9.60	3.07 ± 3.98	<0.001	21.01 ± 8.62	3.13 ± 3.63	<0.001
Y-BOCS	26.94 ± 6.44			27.62 ± 6.19		

OCD, obsessive-compulsive disorder; HC, healthy control; MADRS, Montgomery-Åsberg Depression Rating Scale; Y-BOCS , Yale-Brown Obsessive-Compulsive Scale

[a]n(%) or mean ± standard deviation

[b]Chi-square test or independent samples t test

2. Differences in DNA methylation levels between patients with OCD and healthy controls

Regarding the two *FKBP5* CpG sites, MANCOVA in men revealed that OCD status had a significant overall effect on DNA methylation levels (Wilks $\lambda = 0.944$, $F(2, 263) = 7.800$, $p < 0.001$), but the effect was not significant for women **(Table 2)**. Post hoc comparisons indicated that men with

OCD had significantly lower methylation levels at *FKBP5* CpG2 than healthy controls ($F = 11.177$, $p<0.001$, $\eta p^{2c}=0.04$). Additionally, in a subset of drug-naïve or -free patients with OCD, the *FKBP5* CpG2 levels in men were still significant (**Table S3**).

For the three *NR3C1* CpG sites, while no significant finding was found in men, MANCOVA revealed that OCD status had a significant overall effect on DNA methylation levels in women (Wilks $\lambda = 0.876$, $F(3, 158) = 7.468$, $p < 0.001$) **(Table 2**). In post hoc analysis, the women with OCD had significantly lower methylation levels at *NR3C1* CpG3 than healthy controls ($F = 17.888$, $p<0.001$, $\eta p^{2c}=0.10$). The statistical significance of between-group differences persisted in a subset of drug-naïve or -free patients (**Table S3)**.

3. Relationships between early life trauma, methylation levels, and OCD status

In men, structural equation modeling to verify the second hypothesis revealed statistically significant direct effects from early-life trauma ($B = 0.450$, $\beta = 0.410$, $p < 0.001$), *FKBP5* CpG1 methylation level ($B = -0.202$, $\beta = -0.170$, $p = 0.016$), *FKBP5* CpG2 methylation level ($B = -0.308$, $\beta = -0275$, $p < 0.001$), and *NR3C1* methylation level ($B = -0.492$, $\beta = -0.206$, $p = 0.014$) on OCD development without any moderation effects by rs1360780 genotype. There was no indirect effect of early-life trauma mediated by *FKBP5* methylation or *NR3C1* methylation on OCD. In addition, there was no moderating effect of the genotype for early-life trauma on *FKBP5* DNA methylation changes. **Figure 1** presents the relationship between early-life trauma, methylation of each gene, and OCD from the SEM results in keeping with the hypothesis of the study. Overall, the final model was the best fit for the data (chi-square = 15.138; chi-square/df = 0.757, $p = 0.769$; RMSEA = 0.000; CFI = 1.000; TLI = 1.076; WRMR = 0.499). The final SEMs for drug-naïve or -free men showed similar findings (**Figure S4**)

In women, SEM revealed statistically significant direct effects from early-life trauma (B = 0.466, β = 0.396, p = 0.001) and *NR3C1* methylation level (B = -0.752, β = -0.358, p < 0.001) on OCD development. There was no indirect effect of early-life trauma mediated by *NR3C1* methylation on OCD. *FKBP5* methylation levels had no direct effect on OCD development in women. (**Figure 2**) Overall, the final model was a very good fit for the data (chi-square = 30.985; chi-square/df = 1.347, p = 0.123; RMSEA = 0.045; CFI = 0.928; TLI = 0.908; WRMR = 0.731). The diagram of the final SEM result is shown in the supplementary material (**Figure S3**). The SEMs for drug-naïve or -free women are shown in **Figure S4**.

Table 2 Results of MANCOVA of *FKBP5* and *NR3C1* DNA methylation between patients with OCD and healthy controls

		Men					Women				
		OCD[a] (n = 165)	HC[a] (n = 117)	F	P[b]	η_p^{2c}	OCD[a] (n = 91)	HC[a] (n = 84)	F	P[b]	η_p^{2c}
Statistics:		Wilks λ = 0.944, F(2, 263) = 7.800, p < 0.001*					Wilks λ = 0.997, F(2, 158) = 0.208, p = 0.812				
FKBP5 (intron7)	CpG1 (+52,080)	96.94 ± 2.98	97.47 ± 2.71	2.515	0.114	0.009	97.25 ± 2.93	97.36 ± 2.57	0.151	0.698	<0.001
	CpG2 (+52,105)	92.38 ± 3.33	93.71 ± 3.21	11.177	<0.001*	0.040	92.60 ± 3.42	93.04 ± 3.74	0.148	0.701	<0.001
Statistics:		Wilks λ = 0.972, F(3, 258) = 2.464, p = 0.063					Wilks λ = 0.876, F(3, 158) = 7.468, p < 0.001*				
NR3C1 (exon1F)	CpG1 (-3158)	1.79 ± 1.03	1.88 ± 0.96	0.945	0.332	0.003	1.96 ± 1.48	1.76 ± 1.01	0.021	0.885	<0.001
	CpG2 (-3155)	2.66 ± 1.40	2.75 ± 1.44	1.553	0.214	0.006	2.58 ± 1.20	2.80 ± 1.22	4.405	0.037	0.030
	CpG3 (-3140)	2.87 ± 2.01	3.04 ± 1.26	7.428	0.007*	0.030	2.59 ± 1.27	3.01 ± 0.92	17.888	<0.001*	0.100†

MANCOVA, Multivariate analysis of covariance; OCD, obsessive-compulsive disorder; HC, healthy control

MANCOVA demonstrated significant between-group difference after controlling for age, rs1360780 genotype, ETISR-SF total score, and MADRS score.

[a]Mean ± standard deviation of raw data

[b]Statistical significance for post-hoc ANCOVA was set at P < 0.025 after Bonferroni correction for 2 CpG sites in MANCOVA of *FKBP5* intron 7 methylation and at P 0.017 after Bonferroni correction for 3 CpG sites in MANCOVA of *NR3C1* exon 1F methylation

[c]Effect size was calculated using partial eta squared and interpreted according to the rule of Miles and Shevlin (2001)

†Medium effect (> 0.06)

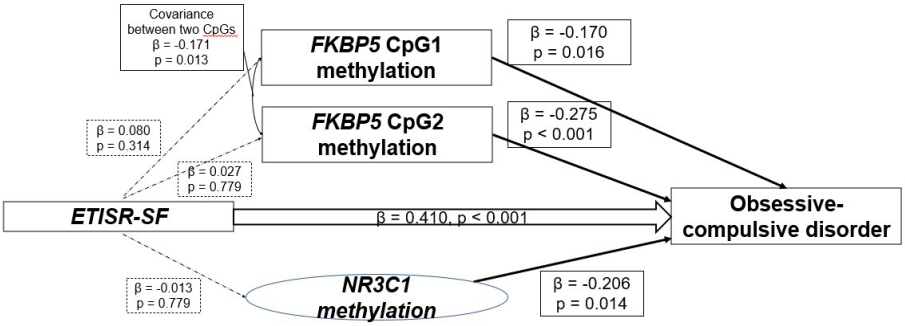

Figure 1. The relationship between ETISR-SF, *FKBP5* methylation, *NR3C1* methylation, and OCD in men from SEM model which also included age, *FKBP5* rs1360780 genotype, and interaction term between the genotype and ETISR-SF, OCD status as exogenous variables in addition to presented variables. Whole SEM model is presented at supplementary material. Above, all coefficients are standardized estimates. (Solid lines/boxes: statistically significant, Dotted lines/boxes: not statistically significant)

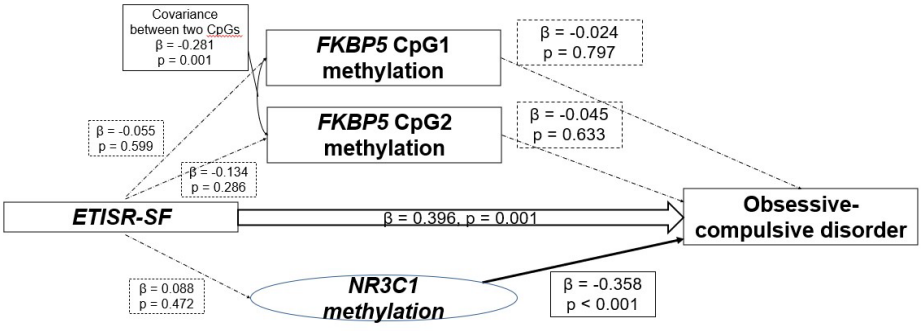

Figure 2. The relationship between ETISR-SF, *FKBP5* methylation, *NR3C1* methylation, and OCD in women from SEM model which also included age, *FKBP5* rs1360780 genotype, and interaction term between the genotype and ETISR-SF, OCD status as exogenous variables in addition to presented

variables. Whole SEM model is presented at supplementary material. Above, all coefficients are standardized estimates. (Solid lines/boxes: statistically significant, Dotted lines/boxes: not statistically significant)

IV. DISCUSSION

The present candidate epigenetic study investigated the DNA methylation levels of the HPA axis-related genes *FKBP5* and *NR3C1* in patients with OCD compared to normal controls. We found that the DNA methylation level of one CpG on *FKBP5* intron 7 was lower in men with OCD than in normal controls. In addition, the DNA methylation level of one CpG on *NR3C1* exon 1F was lower in women with OCD than in normal controls. The findings of the present study suggest that epigenetic changes in *FKBP5* and *NR3C1* may play a role in the complex pathogenesis of OCD.

In this study, a decreased DNA methylation level of *FKBP5* Intron7 CpG2 in men with OCD compared to normal controls was observed after controlling for early-life trauma and depressive symptoms. The between-group difference was still significant in a subset of drug-naïve or -free men with OCD. To our knowledge, there have been no studies that investigated *FKBP5* methylation changes in OCD. In other stress-related disorders as well as general populations, previous clinical and experimental studies showed that *FKBP5* intron 7 demethylations were related to increased *FKBP5* transcription and GR sensitivity changes [45,61,74,75]. The finding of reduced *FKBP5* DNA methylation in OCD may reflect that patients with OCD have higher *FKBP5* transcription and dysfunctional HPA-axis, although we examined neither transcription levels of *FKBP5* nor HPA-axis functions. Although little is known about epigenetic alteration of *FKBP5* in OCD, dysfunctional HPA-axis activity or GR sensitivity change has been reported in animal and clinical studies of OCD. In animal studies, *Fkbp5* knockout mice were more resilient and cognitively flexible than

wild-type mice, showing much lower glucocorticoid levels [37,76]. Several human studies have revealed evidence of hyperactive HPA-axis activity in patients with OCD with increases in basal cortisol levels when longitudinal follow-up was performed [20,24,77,78]. In addition, a study using psychological stressors to evaluate HPA-axis sensitivity showed decreased cortisol levels in response to stress in the OCD group, while increased cortisol levels in response to stress were observed in normal controls [24]. These findings may indicate the involvement of the HPA axis in OCD pathophysiology, possibly through altered DNA methylation at *FKBP5*. Given that few studies have examined this speculation of *FKBP5* in OCD, future studies should confirm the relationship between *FKBP5* demethylation and HPA axis dysfunction in OCD.

For *NR3C1*, significant *NR3C1* exon 1F CpG3 hypomethylation in women with OCD was observed. The statistical significance of between-group differences persisted in a subset of drug-naïve or -free women with OCD. Although there is no direct comparison study available for *NR3C1* methylation status between patients with OCD and healthy controls, a previous study of major depression also showed reduced *NR3C1* methylation in depressive patients compared to healthy controls [50]. Considering evidence on inverse associations between *NR3C1* DNA methylation and expression [79], the hypomethylation status may stand for high *NR3C1* expression and HPA-axis dysregulation [80]. In addition, although little is known about association between OCD and the GR gene *NR3C1*'s methylation status, there is some evidence showing connection between dysregulated GR and OC-like symptoms in animal [81]. Further exploration combined with *NR3C1* methylation, expression, and HPA function is needed in a large independent sample with OCD.

Contrary to our expectation, we found no significant indirect effect of early life trauma on OCD status through the DNA methylation levels because of lack of association between early life trauma and DNA methylation levels. Previous studies for *NR3C1* exon 1F have also shown mostly no associations

between childhood trauma and DNA methylation [27], while several studies for *FKBP5* intron 7 have reported demethylation of the region related to early life trauma [29]. The following points should be considered when interpreting the current results. The sample size may have been insufficient to detect the potential mediating effects of the DNA methylation level on the association. In addition, unmeasured confounders such as genetic variations and recent stressors may have affected the results. In particular, the lack of association between the DNA methylation level and early-life trauma suggests that the observed DNA methylation levels in patients with OCD are not primarily determined by childhood trauma. Rather, they may reflect the consequences of chronic cumulative stress responses for various life events including childhood adversity and distressing clinical symptoms. Furthermore, maternal trauma exposure which was not considered in this study has also been reported to affect offspring's *NR3C1* exon 1F methylation level [27] and *FKBP5* intron 7 methylation level [82]. Further research would benefit from using a larger sample of OCD with longitudinal information on temporal precedence and sequential DNA methylation status to explore the epigenetic role in complex diseases such as OCD.

On the other hand, the present findings of DNA methylation differences between OCD and normal controls showed sex differences. While *FKBP5* intron 7 demethylation was significantly associated with OCD only in men, *NR3C1* exon 1F demethylation was prominent in women with OCD. Sexual dimorphism in the HPA axis from different gonadal systems may be responsible for this [83]. Alterations in estrogen have been implicated in OCD pathogenesis, as reproductive events such as menarche, pregnancy, childbirth, and menopause have been revealed to coincide with OCD development or symptom aggravation [3,72,84-86]. Estrogen has also been known to impact neurotransmitter systems implicated in OCD, such as serotonin, dopamine, and glutamate, suggesting its powerful role in OCD pathogenesis [87]. Moreover,

estrogen can affect the HPA axis through transcriptional modulation of associated genes, resulting in sex differences in the responsivity of the HPA axis [83,88,89]. Meanwhile, androgens can also affect the HPA axis in various ways, such as increasing GR expression or blocking limbic signals to the HPA axis [89-91]. The interactions between the sexual hormone system and HPA axis may be one of the possible explanations for the current different results between men and women, as they can act as important modulating factors affecting the DNA methylation level of HPA axis-related genes. Future studies on OCD pathogenesis should take a more delicate approach with consideration of sex hormones and their interaction with the HPA axis.

Additionally, in the case of *FKBP5* rs1360780, there was no moderating effect of the genotype for early-life trauma on *FKBP5* DNA methylation changes. Contrary to this finding, several previous studies have shown that early-life trauma can selectively induce demethylation of CpGs in *FKBP5* intron 7 in T allele carriers of rs1360780 [61,92-94]. This discrepancy may possibly be from ETISR-SF's characteristic of overestimating general traumas by 11 items compared to physical abuses and sexual abuses with relatively small items (5 or 6 items) but severe effects. When an additional pathway analysis was performed excluding general traumas in calculating ETISR-SF so that only physical, emotional, and sexual traumas were included, there was a mediation effect of the SNP between early-life trauma and *FKBP5* intron 7 DNA methylation levels, consistent with previous studies (**Figure S5**). Future epigenetic studies need to comprehensively assess early life trauma with consideration for the types and context of trauma, as they may work differently in epigenetic mechanisms [62,95,96] and may differentially affect the development of psychiatric disorders [13,26].

There are several limitations to this study. First, this study targeted only certain CpG sites of *FKBP5* and *NR3C1*, whose functions have been most widely studied. Second, potential confounders, such as alcohol or smoking,

which can influence methylation levels, were not adjusted. Third, methylation markers were obtained from PBMCs, not from brain tissues. However, several lines of evidence suggest that peripheral tissue could serve as an index of brain changes. In animal studies, *FKBP5* methylation changes were strongly correlated between the brain and peripheral blood cells, suggesting that peripheral tissue could serve as an index of brain changes, although the studies did not focus on intron 7, which is the target of the current study [74,97]. Several studies have shown that brain structure and functions are associated with peripheral tissue DNA methylation of *FKBP5* and *NR3C1* [50,98-101]. Finally, this study is an observational, cross-sectional study. Theoretically, the positive results should be cautiously interpreted as associations. That is, demethylation of *FKBP5* or *NR3C1* can be either a cause, result, or parallel phenomenon of OCD. In any case, the results may reflect some distinct features of OCD, especially related to stress regulating mechanisms, including the HPA-axis system.

V. CONCLUSION

In summary, the present study showed that reduced DNA methylation at certain CpG sites of *FKBP5* and *NR3C1* is involved in OCD. Altered methylation levels of the HPA axis-related gene were related to OCD status in a sexually dimorphic way. The present findings suggest that epigenetic changes in *FKBP5* and *NR3C1* may play a role in the complex pathogenesis of OCD. Further research is needed to examine how DNA methylation and mRNA expression of HPA-axis related genes and HPA axis function are interrelated in OCD.

REFERENCES

1. Stein DJ. Obsessive-compulsive disorder. Lancet 2002;360:397-405.
2. Karno M, Golding JM, Sorenson SB, Burnam MA. The epidemiology of obsessive-compulsive disorder in five US communities. Arch Gen Psychiatry 1988;45:1094-9.
3. Ruscio AM, Stein DJ, Chiu WT, Kessler RC. The epidemiology of obsessive-compulsive disorder in the National Comorbidity Survey Replication. Mol Psychiatry 2010;15:53-63.
4. Mahjani B, Bey K, Boberg J, Burton C. Genetics of obsessive-compulsive disorder. Psychol Med 2021;51:2247-59.
5. Burton CL, Lemire M, Xiao B, Corfield EC, Erdman L, Bralten J, et al. Genome-wide association study of pediatric obsessive-compulsive traits: shared genetic risk between traits and disorder. Transl Psychiatry 2021;11:91.
6. Purty A, Nestadt G, Samuels JF, Viswanath B. Genetics of obsessive-compulsive disorder. Indian J Psychiatry 2019;61:S37-s42.
7. Park CI, Kim HW, Jeon S, Kang JI, Kim SJ. Reduced DNA methylation of the oxytocin receptor gene is associated with obsessive-compulsive disorder. Clin Epigenetics 2020;12:101.
8. Grünblatt E, Marinova Z, Roth A, Gardini E, Ball J, Geissler J, et al. Combining genetic and epigenetic parameters of the serotonin transporter gene in obsessive-compulsive disorder. J Psychiatr Res 2018;96:209-17.
9. Schiele MA, Thiel C, Deckert J, Zaudig M, Berberich G, Domschke K. Monoamine Oxidase A Hypomethylation in Obsessive-Compulsive Disorder: Reversibility By Successful Psychotherapy? Int J Neuropsychopharmacol 2020;23:319-23.
10. Franklin TB, Russig H, Weiss IC, Gräff J, Linder N, Michalon A, et al. Epigenetic transmission of the impact of early stress across generations. Biol Psychiatry 2010;68:408-15.
11. Zannas AS, West AE. Epigenetics and the regulation of stress vulnerability and resilience. Neuroscience 2014;264:157-70.
12. Cromer KR, Schmidt NB, Murphy DL. An investigation of traumatic life events and obsessive-compulsive disorder. Behav Res Ther 2007;45:1683-91.
13. Gershuny BS, Baer L, Parker H, Gentes EL, Infield AL, Jenike MA. Trauma and posttraumatic stress disorder in treatment-resistant obsessive-compulsive disorder. Depress Anxiety 2008;25:69-71.
14. Fontenelle LF, Cocchi L, Harrison BJ, Shavitt RG, do Rosário MC, Ferrão YA, et al. Towards a post-traumatic subtype of obsessive-compulsive disorder. J Anxiety Disord 2012;26:377-83.
15. Kuhlman KR, Geiss EG, Vargas I, Lopez-Duran N. HPA-Axis Activation as a Key Moderator of Childhood Trauma Exposure and Adolescent Mental Health. J Abnorm Child Psychol 2018;46:149-57.
16. Briggs ES, Price IR. The relationship between adverse childhood experience and obsessive-compulsive symptoms and beliefs: the role of anxiety, depression, and experiential avoidance. J Anxiety Disord 2009;23:1037-46.
17. Gothelf D, Aharonovsky O, Horesh N, Carty T, Apter A. Life events and personality factors in children and adolescents with obsessive-compulsive disorder and other anxiety disorders. Compr Psychiatry 2004;45:192-8.

18. Ojserkis R, McKay D, Lebeaut A. Associations between mental contamination, disgust, and obsessive-compulsive symptoms in the context of trauma. Journal of obsessive-compulsive and related disorders 2018;17:23-30.
19. Park S, Hong JP, Bae JN, Cho SJ, Lee DW, Lee JY, et al. Impact of childhood exposure to psychological trauma on the risk of psychiatric disorders and somatic discomfort: single vs. multiple types of psychological trauma. Psychiatry Res 2014;219:443-9.
20. Kluge M, Schüssler P, Künzel HE, Dresler M, Yassouridis A, Steiger A. Increased nocturnal secretion of ACTH and cortisol in obsessive compulsive disorder. J Psychiatr Res 2007;41:928-33.
21. Faravelli C, Lo Sauro C, Godini L, Lelli L, Benni L, Pietrini F, et al. Childhood stressful events, HPA axis and anxiety disorders. World J Psychiatry 2012;2:13-25.
22. Şimşek Ş, Gençoğlan S, Yüksel T, Kaplan İ, Alaca R. Cortisol and Brain-Derived Neurotrophic Factor Levels Prior to Treatment in Children With Obsessive-Compulsive Disorder. J Clin Psychiatry 2016;77:e855-9.
23. Fluitman SB, Denys DA, Heijnen CJ, Westenberg HG. Disgust affects TNF-alpha, IL-6 and noradrenalin levels in patients with obsessive-compulsive disorder. Psychoneuroendocrinology 2010;35:906-11.
24. Gustafsson PE, Gustafsson PA, Ivarsson T, Nelson N. Diurnal cortisol levels and cortisol response in youths with obsessive-compulsive disorder. Neuropsychobiology 2008;57:14-21.
25. Argentieri MA, Nagarajan S, Seddighzadeh B, Baccarelli AA, Shields AE. Epigenetic pathways in human disease: the impact of DNA methylation on stress-related pathogenesis and current challenges in biomarker development. EBioMedicine 2017;18:327-50.
26. Raposo-Lima C, Morgado P. The Role of Stress in Obsessive-Compulsive Disorder: A Narrative Review. Harvard Review of Psychiatry 2020;28:356-70.
27. Watkeys OJ, Kremerskothen K, Quidé Y, Fullerton JM, Green MJ. Glucocorticoid receptor gene (NR3C1) DNA methylation in association with trauma, psychopathology, transcript expression, or genotypic variation: A systematic review. Neurosci Biobehav Rev 2018;95:85-122.
28. Kageyama K, Iwasaki Y, Daimon M. Hypothalamic Regulation of Corticotropin-Releasing Factor under Stress and Stress Resilience. Int J Mol Sci 2021;22.
29. Matosin N, Halldorsdottir T, Binder EB. Understanding the Molecular Mechanisms Underpinning Gene by Environment Interactions in Psychiatric Disorders: The FKBP5 Model. Biol Psychiatry 2018;83:821-30.
30. Zannas AS, Wiechmann T, Gassen NC, Binder EB. Gene-Stress-Epigenetic Regulation of FKBP5: Clinical and Translational Implications. Neuropsychopharmacology : official publication of the American College of Neuropsychopharmacology 2016;41:261-74.
31. Binder EB. The role of FKBP5, a co-chaperone of the glucocorticoid receptor in the pathogenesis and therapy of affective and anxiety disorders. Psychoneuroendocrinology 2009;34 Suppl 1:S186-95.
32. Rein T. FK506 binding protein 51 integrates pathways of adaptation: FKBP51 shapes the reactivity to environmental change. Bioessays 2016;38:894-902.
33. Paakinaho V, Makkonen H, Jääskeläinen T, Palvimo JJ. Glucocorticoid

receptor activates poised FKBP51 locus through long-distance interactions. Mol Endocrinol 2010;24:511-25.
34. Jääskeläinen T, Makkonen H, Palvimo JJ. Steroid up-regulation of FKBP51 and its role in hormone signaling. Curr Opin Pharmacol 2011;11:326-31.
35. Thomassin H, Flavin M, Espinás ML, Grange T. Glucocorticoid-induced DNA demethylation and gene memory during development. Embo j 2001;20:1974-83.
36. Touma C, Gassen NC, Herrmann L, Cheung-Flynn J, Büll DR, Ionescu IA, et al. FK506 binding protein 5 shapes stress responsiveness: modulation of neuroendocrine reactivity and coping behavior. Biol Psychiatry 2011;70:928-36.
37. Hartmann J, Wagner KV, Liebl C, Scharf SH, Wang XD, Wolf M, et al. The involvement of FK506-binding protein 51 (FKBP5) in the behavioral and neuroendocrine effects of chronic social defeat stress. Neuropharmacology 2012;62:332-9.
38. Hartmann J, Wagner KV, Gaali S, Kirschner A, Kozany C, Rühter G, et al. Pharmacological Inhibition of the Psychiatric Risk Factor FKBP51 Has Anxiolytic Properties. J Neurosci 2015;35:9007-16.
39. Galatzer-Levy IR, Andero R, Sawamura T, Jovanovic T, Papini S, Ressler KJ, et al. A cross species study of heterogeneity in fear extinction learning in relation to FKBP5 variation and expression: Implications for the acute treatment of posttraumatic stress disorder. Neuropharmacology 2017;116:188-95.
40. Sawamura T, Klengel T, Armario A, Jovanovic T, Norrholm SD, Ressler KJ, et al. Dexamethasone Treatment Leads to Enhanced Fear Extinction and Dynamic Fkbp5 Regulation in Amygdala. Neuropsychopharmacology 2016;41:832-46.
41. Kohrt BA, Worthman CM, Ressler KJ, Mercer KB, Upadhaya N, Koirala S, et al. Cross-cultural gene- environment interactions in depression, post-traumatic stress disorder, and the cortisol awakening response: FKBP5 polymorphisms and childhood trauma in South Asia. Int Rev Psychiatry 2015;27:180-96.
42. VanZomeren-Dohm AA, Pitula CE, Koss KJ, Thomas K, Gunnar MR. FKBP5 moderation of depressive symptoms in peer victimized, post-institutionalized children. Psychoneuroendocrinology 2015;51:426-30.
43. Zimmermann P, Brückl T, Nocon A, Pfister H, Binder EB, Uhr M, et al. Interaction of FKBP5 gene variants and adverse life events in predicting depression onset: results from a 10-year prospective community study. Am J Psychiatry 2011;168:1107-16.
44. Roy A, Hodgkinson CA, Deluca V, Goldman D, Enoch MA. Two HPA axis genes, CRHBP and FKBP5, interact with childhood trauma to increase the risk for suicidal behavior. J Psychiatr Res 2012;46:72-9.
45. Klengel T, Binder EB. Allele-specific epigenetic modification: a molecular mechanism for gene-environment interactions in stress-related psychiatric disorders? Epigenomics 2013;5:109-12.
46. Binder EB, Bradley RG, Liu W, Epstein MP, Deveau TC, Mercer KB, et al. Association of FKBP5 polymorphisms and childhood abuse with risk of posttraumatic stress disorder symptoms in adults. Jama 2008;299:1291-305.
47. Boscarino JA, Erlich PM, Hoffman SN, Zhang X. Higher FKBP5, COMT, CHRNA5, and CRHR1 allele burdens are associated with PTSD and interact

with trauma exposure: implications for neuropsychiatric research and treatment. Neuropsychiatr Dis Treat 2012;8:131-9.
48. Young KA, Thompson PM, Cruz DA, Williamson DE, Selemon LD. BA11 FKBP5 expression levels correlate with dendritic spine density in postmortem PTSD and controls. Neurobiol Stress 2015;2:67-72.
49. Vitellius G, Trabado S, Bouligand J, Delemer B, Lombès M. Pathophysiology of Glucocorticoid Signaling. Ann Endocrinol (Paris) 2018;79:98-106.
50. Na KS, Chang HS, Won E, Han KM, Choi S, Tae WS, et al. Association between glucocorticoid receptor methylation and hippocampal subfields in major depressive disorder. PLoS One 2014;9:e85425.
51. Bustamante AC, Aiello AE, Galea S, Ratanatharathorn A, Noronha C, Wildman DE, et al. Glucocorticoid receptor DNA methylation, childhood maltreatment and major depression. J Affect Disord 2016;206:181-8.
52. Labonté B, Azoulay N, Yerko V, Turecki G, Brunet A. Epigenetic modulation of glucocorticoid receptors in posttraumatic stress disorder. Transl Psychiatry 2014;4:e368.
53. Bakusic J, Schaufeli W, Claes S, Godderis L. Stress, burnout and depression: A systematic review on DNA methylation mechanisms. J Psychosom Res 2017;92:34-44.
54. Juszczak GR, Stankiewicz AM. Glucocorticoids, genes and brain function. Prog Neuropsychopharmacol Biol Psychiatry 2018;82:136-68.
55. Chatzittofis A, Boström ADE, Ciuculete DM, Öberg KG, Arver S, Schiöth HB, et al. HPA axis dysregulation is associated with differential methylation of CpG-sites in related genes. Sci Rep 2021;11:20134.
56. Bremner JD, Bolus R, Mayer EA. Psychometric properties of the Early Trauma Inventory-Self Report. J Nerv Ment Dis 2007;195:211-8.
57. Jeon JR, Lee EH, Lee SW, Jeong EG, Kim JH, Lee D, et al. The early trauma inventory self report-short form: psychometric properties of the korean version. Psychiatry Investig 2012;9:229-35.
58. Goodman WK, Price LH, Rasmussen SA, Mazure C, Delgado P, Heninger GR, et al. The Yale-Brown Obsessive Compulsive Scale. II. Validity. Arch Gen Psychiatry 1989;46:1012-6.
59. Montgomery SA, Asberg M. A new depression scale designed to be sensitive to change. Br J Psychiatry 1979;134:382-9.
60. Klengel T, Binder EB. FKBP5 allele-specific epigenetic modification in gene by environment interaction. Neuropsychopharmacology 2015;40:244-6.
61. Klengel T, Mehta D, Anacker C, Rex-Haffner M, Pruessner JC, Pariante CM, et al. Allele-specific FKBP5 DNA demethylation mediates gene-childhood trauma interactions. Nat Neurosci 2013;16:33-41.
62. Perroud N, Paoloni-Giacobino A, Prada P, Olié E, Salzmann A, Nicastro R, et al. Increased methylation of glucocorticoid receptor gene (NR3C1) in adults with a history of childhood maltreatment: a link with the severity and type of trauma. Transl Psychiatry 2011;1:e59.
63. Martín-Blanco A, Ferrer M, Soler J, Salazar J, Vega D, Andión O, et al. Association between methylation of the glucocorticoid receptor gene, childhood maltreatment, and clinical severity in borderline personality disorder. J Psychiatr Res 2014;57:34-40.
64. Tyrka AR, Price LH, Marsit C, Walters OC, Carpenter LL. Childhood adversity

and epigenetic modulation of the leukocyte glucocorticoid receptor: preliminary findings in healthy adults. PLoS One 2012;7:e30148.
65. Straight B, Fisher G, Needham BL, Naugle A, Olungah C, Wanitjirattikal P, et al. Lifetime stress and war exposure timing may predict methylation changes at NR3C1 based on a pilot study in a warrior cohort in a small-scale society in Kenya. Am J Hum Biol 2021;33:e23515.
66. Blom G. Statistical estimates and transformed beta-variables: Almqvist & Wiksell; 1958.
67. Fujii T, Hori H, Ota M, Hattori K, Teraishi T, Sasayama D, et al. Effect of the common functional FKBP5 variant (rs1360780) on the hypothalamic-pituitary-adrenal axis and peripheral blood gene expression. Psychoneuroendocrinology 2014;42:89-97.
68. Muthen LKaM, B.O. Mplus Version 7. 2012.
69. Fan Y, Chen J, Shirkey G, John R, Wu SR, Park H, et al. Applications of structural equation modeling (SEM) in ecological studies: an updated review. Ecological Processes 2016;5:1-12.
70. DeSantis SM, Baker NL, Back SE, Spratt E, Ciolino JD, Moran-Santa Maria M, et al. Gender differences in the effect of early life trauma on hypothalamic-pituitary-adrenal axis functioning. Depress Anxiety 2011;28:383-92.
71. Khramtsova EA, Heldman R, Derks EM, Yu D, Davis LK, Stranger BE. Sex differences in the genetic architecture of obsessive-compulsive disorder. Am J Med Genet B Neuropsychiatr Genet 2019;180:351-64.
72. Mathis MA, Alvarenga P, Funaro G, Torresan RC, Moraes I, Torres AR, et al. Gender differences in obsessive-compulsive disorder: a literature review. Braz J Psychiatry 2011;33:390-9.
73. Tripathi A, Avasthi A, Grover S, Sharma E, Lakdawala BM, Thirunavukarasu M, et al. Gender differences in obsessive-compulsive disorder: Findings from a multicentric study from India. Asian J Psychiatr 2018;37:3-9.
74. Ewald ER, Wand GS, Seifuddin F, Yang X, Tamashiro KL, Potash JB, et al. Alterations in DNA methylation of Fkbp5 as a determinant of blood-brain correlation of glucocorticoid exposure. Psychoneuroendocrinology 2014;44:112-22.
75. Klengel T, Binder EB. Epigenetics of Stress-Related Psychiatric Disorders and Gene × Environment Interactions. Neuron 2015;86:1343-57.
76. Sabbagh JJ, O'Leary JC, 3rd, Blair LJ, Klengel T, Nordhues BA, Fontaine SN, et al. Age-associated epigenetic upregulation of the FKBP5 gene selectively impairs stress resiliency. PLoS One 2014;9:e107241.
77. Monteleone P, Catapano F, Tortorella A, Di Martino S, Maj M. Plasma melatonin and cortisol circadian patterns in patients with obsessive-compulsive disorder before and after fluoxetine treatment. Psychoneuroendocrinology 1995;20:763-70.
78. Bandelow B, Baldwin D, Abelli M, Bolea-Alamanac B, Bourin M, Chamberlain SR, et al. Biological markers for anxiety disorders, OCD and PTSD: A consensus statement. Part II: Neurochemistry, neurophysiology and neurocognition. World J Biol Psychiatry 2017;18:162-214.
79. Watkeys OJ, Kremerskothen K, Quidé Y, Fullerton JM, Green MJ. Glucocorticoid receptor gene (NR3C1) DNA methylation in association with

trauma, psychopathology, transcript expression, or genotypic variation: A systematic review. Neuroscience & Biobehavioral Reviews 2018;95:85-122.
80. Menke A, Arloth J, Pütz B, Weber P, Klengel T, Mehta D, et al. Dexamethasone stimulated gene expression in peripheral blood is a sensitive marker for glucocorticoid receptor resistance in depressed patients. Neuropsychopharmacology 2012;37:1455-64.
81. Gannon AL, O'Hara L, Mason JI, Rebourcet D, Smith S, Traveres A, et al. Ablation of glucocorticoid receptor in the hindbrain of the mouse provides a novel model to investigate stress disorders. Sci Rep 2019;9:3250.
82. Yehuda R, Daskalakis NP, Bierer LM, Bader HN, Klengel T, Holsboer F, et al. Holocaust Exposure Induced Intergenerational Effects on FKBP5 Methylation. Biol Psychiatry 2016;80:372-80.
83. Oyola MG, Handa RJ. Hypothalamic-pituitary-adrenal and hypothalamic-pituitary-gonadal axes: sex differences in regulation of stress responsivity. Stress 2017;20:476-94.
84. Nestadt G, Grados M, Samuels JF. Genetics of obsessive-compulsive disorder. Psychiatr Clin North Am 2010;33:141-58.
85. Lochner C, Hemmings SM, Kinnear CJ, Moolman-Smook JC, Corfield VA, Knowles JA, et al. Gender in obsessive-compulsive disorder: clinical and genetic findings. Eur Neuropsychopharmacol 2004;14:105-13.
86. Guglielmi V, Vulink NC, Denys D, Wang Y, Samuels JF, Nestadt G. Obsessive-compulsive disorder and female reproductive cycle events: results from the OCD and reproduction collaborative study. Depress Anxiety 2014;31:979-87.
87. McEwen BS, Alves SE. Estrogen actions in the central nervous system. Endocr Rev 1999;20:279-307.
88. Mattina GF, Steiner M. The need for inclusion of sex and age of onset variables in genetic association studies of obsessive-compulsive disorder: Overview. Prog Neuropsychopharmacol Biol Psychiatry 2016;67:107-16.
89. Goel N, Workman JL, Lee TT, Innala L, Viau V. Sex differences in the HPA axis. Compr Physiol 2014;4:1121-55.
90. Seale JV, Wood SA, Atkinson HC, Harbuz MS, Lightman SL. Gonadal steroid replacement reverses gonadectomy-induced changes in the corticosterone pulse profile and stress-induced hypothalamic-pituitary-adrenal axis activity of male and female rats. J Neuroendocrinol 2004;16:989-98.
91. Williamson M, Bingham B, Viau V. Central organization of androgen-sensitive pathways to the hypothalamic-pituitary-adrenal axis: implications for individual differences in responses to homeostatic threat and predisposition to disease. Prog Neuropsychopharmacol Biol Psychiatry 2005;29:1239-48.
92. Kang JI, Kim TY, Choi JH, So HS, Kim SJ. Allele-specific DNA methylation level of FKBP5 is associated with post-traumatic stress disorder. Psychoneuroendocrinology 2019;103:1-7.
93. Klinger-König J, Hertel J, Van der Auwera S, Frenzel S, Pfeiffer L, Waldenberger M, et al. Methylation of the FKBP5 gene in association with FKBP5 genotypes, childhood maltreatment and depression. Neuropsychopharmacology 2019;44:930-8.
94. Tyrka AR, Ridout KK, Parade SH, Paquette A, Marsit CJ, Seifer R. Childhood maltreatment and methylation of FK506 binding protein 5 gene (FKBP5). Dev

Psychopathol 2015;27:1637-45.
95. Rampp C, Binder EB, Provençal N. Epigenetics in posttraumatic stress disorder. Prog Mol Biol Transl Sci 2014;128:29-50.
96. Vinkers CH, Kalafateli AL, Rutten BP, Kas MJ, Kaminsky Z, Turner JD, et al. Traumatic stress and human DNA methylation: a critical review. Epigenomics 2015;7:593-608.
97. Lee RS, Tamashiro KL, Yang X, Purcell RH, Harvey A, Willour VL, et al. Chronic corticosterone exposure increases expression and decreases deoxyribonucleic acid methylation of Fkbp5 in mice. Endocrinology 2010;151:4332-43.
98. Tozzi L, Farrell C, Booij L, Doolin K, Nemoda Z, Szyf M, et al. Epigenetic Changes of FKBP5 as a Link Connecting Genetic and Environmental Risk Factors with Structural and Functional Brain Changes in Major Depression. Neuropsychopharmacology 2018;43:1138-45.
99. Harms MB, Birn R, Provencal N, Wiechmann T, Binder EB, Giakas SW, et al. Early life stress, FK506 binding protein 5 gene (FKBP5) methylation, and inhibition-related prefrontal function: A prospective longitudinal study. Dev Psychopathol 2017;29:1895-903.
100. McGowan PO, Sasaki A, D'Alessio AC, Dymov S, Labonté B, Szyf M, et al. Epigenetic regulation of the glucocorticoid receptor in human brain associates with childhood abuse. Nat Neurosci 2009;12:342-8.
101. Yehuda R, Flory JD, Bierer LM, Henn-Haase C, Lehrner A, Desarnaud F, et al. Lower methylation of glucocorticoid receptor gene promoter 1F in peripheral blood of veterans with posttraumatic stress disorder. Biol Psychiatry 2015;77:356-64.

Appendix

Table S1. Primer sequences used for genotyping of *FKBP5* rs1360780

Strand		Primer sequence
Reverse	Forward Primer	cctgaaaagattatctgatgc
	Reverse Primer	gcaaagtctccactgtttct
	Genotyping Primer	aaggctttcacataagcaaagtta

Table S2. Primer sequences used for *NR3C1* exon 1F pyrosequencing

Primer name	Sequence	PCR size(bp)
NR3C1-L_F	AATTTTTTAGGAAAAAGGGTGG	157
NR3C1-L_R (5' biotin)	AACTCCCCAATAAATCTAAAACC	157
NR3C1-L_seqF (Sequencing primer)	GGGGGTAGATTTGGTTT	

Table S3 Results of each MANCOVA as subgroup analysis for drug-naïve or free OCD patients comparing with healthy controls

		Men					Women				
		OCD[a] (n = 78)	HC[a] (n = 117)	F	P[b]	η_p^{2c}	OCD[a] (n = 40)	HC[a] (n = 84)	F	P[b]	η_p^{2c}
Statistics:		Wilks λ = 0.950, F(2, 181) = 4.770, p = 0.010*					Wilks λ = 0.987, F(1, 112) = 0.743, p = 0.478				
FKBP5_ (intron7)	CpG1_(+52,080)	96.85 ± 2.66	97.47 ± 2.71	2.041	0.155	0.014	96.71 ± 2.77	97.36 ± 2.57	1.488	0.225	0.013
	CpG2_(+52,105)	92.44 ± 2.99	93.71 ± 3.21	7.138	0.008*	0.040	93.25 ± 3.40	93.04 ± 3.74	0.132	0.718	0.001
Statistics:		Wilks λ = 0.998, F(3, 177) = 0.138, p = 0.937					Wilks λ = 0.886, F(3, 110) = 4.715, p = 0.004*				
NR3C1 (exon1F)	CpG1_(-3158)	1.91 ± 1.08	1.88 ± 0.96	0.002	0.963	<0.001	1.98 ± 0.98	1.76 ± 1.01	0.133	0.716	0.001
	CpG2_(-3155)	2.78 ± 1.44	2.75 ± 1.44	0.092	0.762	<0.001	2.61 ± 1.03	2.80 ± 1.22	1.744	0.189	0.021
	CpG3_(-3140)	3.22 ± 2.56	3.04 ± 1.26	0.394	0.531	0.002	2.69 ± 1.14	3.01 ± 0.92	11.576	<0.001*	0.090†

MANCOVA demonstrated significant between-group difference after controlling for age, rs1360780 genotype, ETISR-SF total score, and MADRS score.

[a]Mean ± standard deviation of raw data

[b]Statistical significance was set at P < 0.025 after Bonferroni correction for 2 CpG sites in MANCOVA of *FKBP5* methylation and at P 0.017 after Bonferroni correction for 3 CpG sites in MANCOVA of *NR3C1* methylation

[c]Effect size was calculated using partial eta squared and interpreted according to the rule of Miles and Shevlin (2001)

†Medium effect (> 0.06)

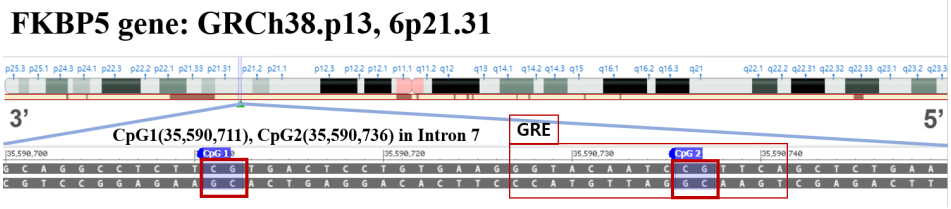

Figure S1. Schematic representation of two cytosine-phosphate-guanine (CpG) sites selected for DNA methylation analysis of the *FKBP5* structure of chromosome 6, based on the Genome Reference Consortium Human Build 38 patch release 13 primary assembly in the NCBI Variation Viewer. The two CpG sites analyzed based on the proximity to glucocorticoid response element (GRE) at intron 7 are shown in red boxes.

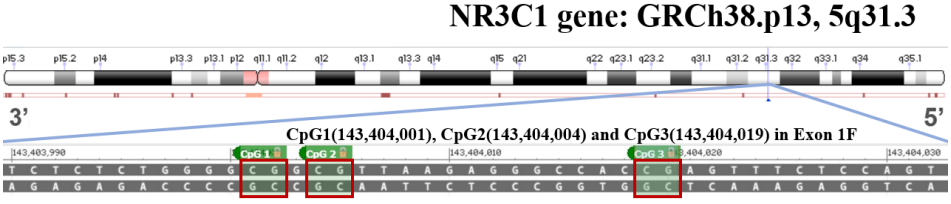

Figure S2. Schematic representation of three cytosine-phosphate-guanine (CpG) sites selected for DNA methylation analysis of the *NR3C1* structure of chromosome 5, based on the Genome Reference Consortium Human Build 38 patch release 13 primary assembly in the NCBI Variation Viewer. The three CpG sites at exon 1F after promotor region are shown in red boxes.

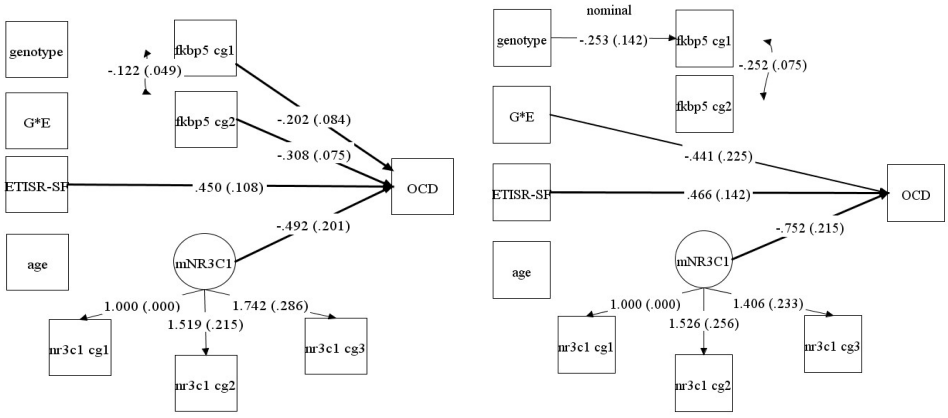

Figure S3. Diagram of SEM results of ETISR-SF, *FKBP5* rs1360780 genotype, and their interaction term (G*E), *FKBP5* methylation, *NR3C1* methylation (mNR3C1 as latent variable), age, and OCD status **<u>in the primary analysis</u>**. Coefficients are unstandardized estimates. Only significant results are presented while nominally significant result is captioned "nominal". (Left: men, Right: women)

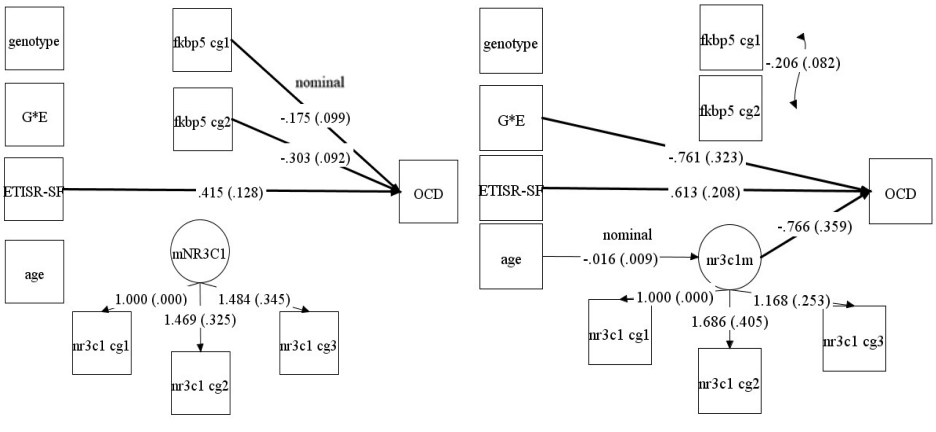

Figure S4. Diagram of SEM results of ETISR-SF, *FKBP5* rs1360780 genotype, and their interaction term (G*E), *FKBP5* methylation, *NR3C1* methylation (mNR3C1 as latent variable), age, and OCD status **<u>in the subgroup analysis for drug-naïve or free patients</u>**. Coefficients are unstandardized estimates. Only significant results are presented while nominally significant result is

captioned “nominal”. All fits were good enough (Left: men, chi-square = 12.510; chi-square/df = 0.626, p = 0.897; RMSEA = 0.000; CFI = 1.000; TLI = 1.262; WRMR = 0.450; Right: women, chi-square = 26.431; chi-square/df = 1.201, p = 0.234; RMSEA = 0.041; CFI = 0.924; TLI = 0.866; WRMR = 0.680).

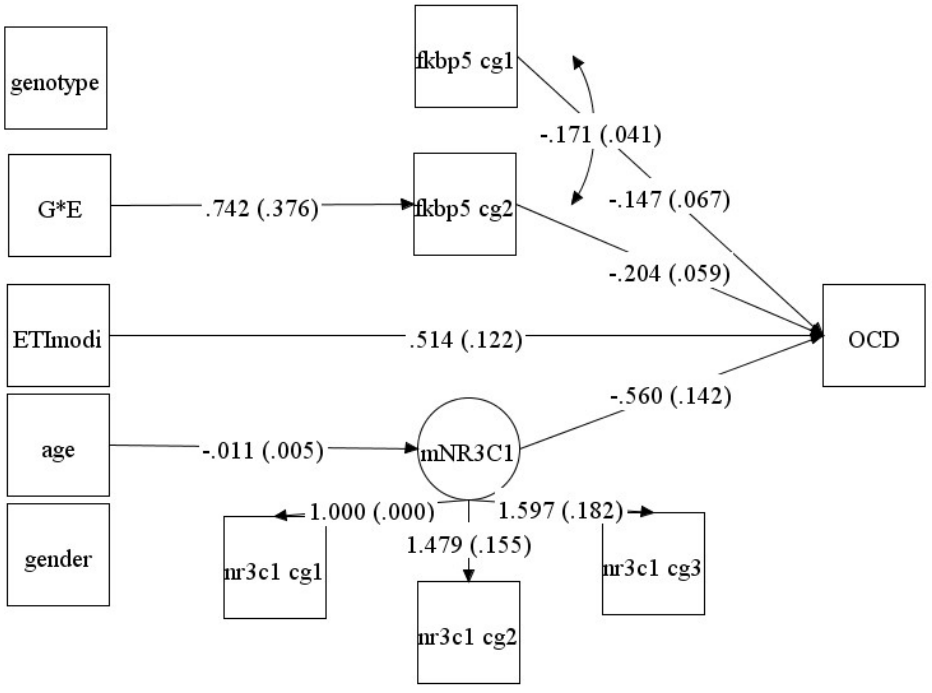

Figure S5. Diagram of SEM results of additional analysis in which ETISR-SF was modified to weigh physical, emotional, and sexual trauma rather than general trauma. Coefficients are unstandardized estimates. Interaction term between SNP rs1360780 genotype and modified ETI (categorical) has significant impact on CpG2 of *FKBP5* intron 7. The model was the best fit for the data (chi-square = 27.794; chi-square/df = 0.993, p = 0.475; RMSEA = 0.000; CFI = 1.000; TLI = 1.001; WRMR = 0.670).

ABSTRACT(IN KOREAN)

시상하부-뇌하수체-부신 축 (HPA-axis) 관련 유전자 *FKBP5*와 *NR3C1*의 메틸레이션과 강박장애의 연관성

<지도교수 김 세 주 >

연세대학교 대학원 의학과

서 준 호

서론: 강박장애에서 시상하부-뇌하수체-부신 축의 조절에 문제가 있다는 증거들은 있지만, 강박장애에서 시상하부-뇌하수체-부신 축의 활동과 연관된 유전자들의 후성유전학적 변화는 잘 연구되어 있지 않다. 본 연구에서는 *FKBP5*와 *NR3C1* 두 유전자의 후성유전학적 변화가 강박증과 연관성이 있는지를 조사했다. 그리고 강박장애와 두 유전자의 메틸레이션 수준, 생애초기트라우마 사이의 관계를 탐색했다.

방법: 18세 이상 40세 이하 267명의 강박장애 환자와 201명의 대조군을 모집하였다. 인구학적 데이터와 임상적 평가, *FKBP5*의 rs1360780 유전자형 분석, 그리고 *FKBP5*와 *NR3C1* 유전자의 파이로시퀀싱을 시행하였다. 남녀 모두에서 다변량공분산분석(MANCOVA)과 구조방정식 모델을 이용하여 분석하였고 약물 비노출군을 대상으로도 분석하였다.

결과: 강박장애 남성에서 *FKBP5* intron 7의 한 CpG 메틸레이션이 정상군에 비해 유의하게 낮았다. *NR3C1* exon 1F의 한 CpG 메틸레이션이 강박장애 여성에서 뚜렷하게 낮았다. 생애초기 트라우마와 강박장애에 대한 유전자 메틸레이션 수준들의 매개효과는 유의하지 않았다.

고찰: 본 연구결과는 *FKBP5*와 *NR3C1*의 메틸레이션과 같은 시상하부-뇌하수체-부신 축 관련유전자의 후성유전학적 요소가

강박증의 병태생리에 관여하고 있음을 시사한다. 강박장애에서 시상하부-뇌하수체-부신 축 기능과 *FKBP5*, *NR3C1* 두 유전자 메틸레이션 및 메신저 RNA 발현 변화가 어떻게 연결되는지에 대한 연구가 필요하다.

핵심되는 말: 강박장애, FKBP5유전자, NR3C1유전자, 후보 후성유전 연구, 메틸레이션, 시상하부-뇌하수체-부신 축, 스트레스 조절